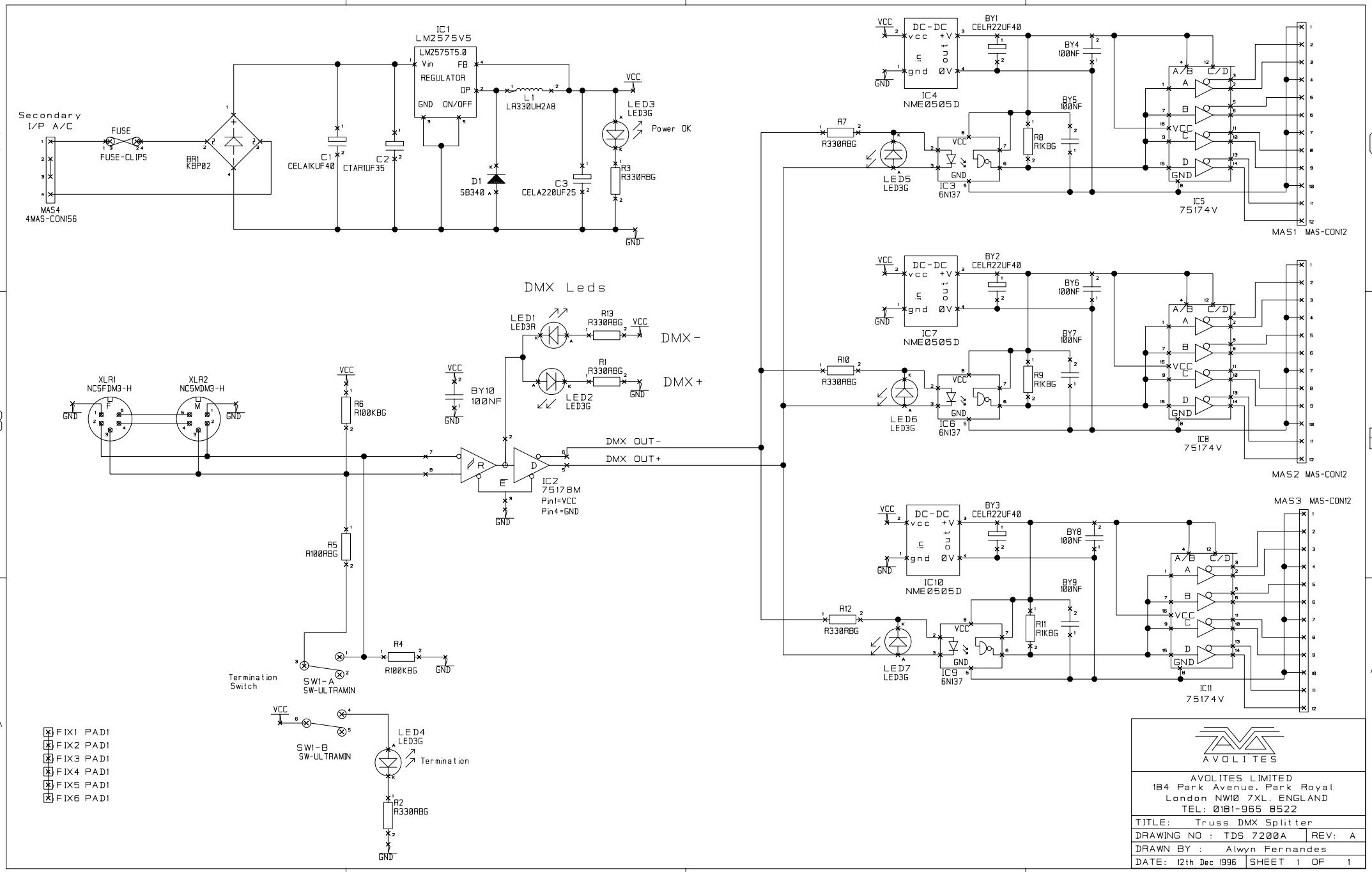
Secondary I/P A/C
FUSE
FUSE-CLIPS
BR1 KBP02
MAS4 4MAS-CON156
C1 CELA1KUF40
C2 CTAR1UF35
IC1 LM2575V5
LM2575T5.0
Vin FB
REGULATOR
OP
GND ON/OFF
L1 LR330UH2A8
D1 SB340
C3 CELA220UF25
LED3 LED3G
Power OK
R3 R330RBG
VCC
GND
DMX Leds
LED1 LED3R
R13 R330RBG
DMX-
R1 R330RBG
DMX+
LED2 LED3G
XLR1 NC5FDM3-H
XLR2 NC5MDM3-H
R6 R100KBG
BY10 100NF
DMX OUT-
DMX OUT+
IC2 75178M
Pin1=VCC
Pin4=GND
R5 R100RBG
R4 R100KBG
Termination Switch
SW1-A SW-ULTRAMIN
SW1-B SW-ULTRAMIN
LED4 LED3G
Termination
R2 R330RBG
FIX1 PAD1
FIX2 PAD1
FIX3 PAD1
FIX4 PAD1
FIX5 PAD1
FIX6 PAD1
BY1 CELA22UF40
IC4 NME0505D
BY4 100NF
BY5 100NF
R7 R330RBG
LED5 LED3G
IC3 6N137
R8 R1KBG
IC5 75174V
MAS1 MAS-CON12
BY2 CELA22UF40
IC7 NME0505D
BY6 100NF
BY7 100NF
R10 R330RBG
LED6 LED3G
IC6 6N137
R9 R1KBG
IC8 75174V
MAS2 MAS-CON12
BY3 CELA22UF40
IC10 NME0505D
BY8 100NF
BY9 100NF
R12 R330RBG
LED7 LED3G
IC9 6N137
R11 R1KBG
IC11 75174V
MAS3 MAS-CON12
AVOLITES
AVOLITES LIMITED
184 Park Avenue, Park Royal
London NW10 7XL. ENGLAND
TEL: 0181-965 8522
TITLE: Truss DMX Splitter
DRAWING NO : TDS 7200A
REV: A
DRAWN BY : Alwyn Fernandes
DATE: 12th Dec 1996
SHEET 1 OF 1